REVISIONS		DWG. NO. 5-A-FFB-30	SHEET 1	REV A
REV	DESCRIPTION	DATE	APPROVED	
A	RELEASED TO PRODUCTION/DMD dmr	4-5-06	DMD	

SPECIFICATIONS:
POWER RATING: 5 WATTS CONTINUOUS
(BI-DIRECTIONAL)
FREQUENCY RANGE: DC TO 4GHz
ATTENUATION VALUE: 30dB
ATTENUATION ACCURACY:
DC TO 1 GHz, ±0.8dB
1 GHz TO 4 GHz, ±1.3dB
VSWR ACCURACY:
DC TO 1 GHz AT 1.10:1 MAX.
1 GHz TO 4 GHz AT 1.25:1 MAX.
AMBIENT TEMPERATURE: -40° C TO +40° C
CONNECTORS: BNC FEMALE
- TRI-ALLOY PLATED
OPERATING POSITION: ANY
NOMINAL SIZE: 2.30 L X .700 DIA.
WEIGHT: APPROX. 2.8 O.Z.

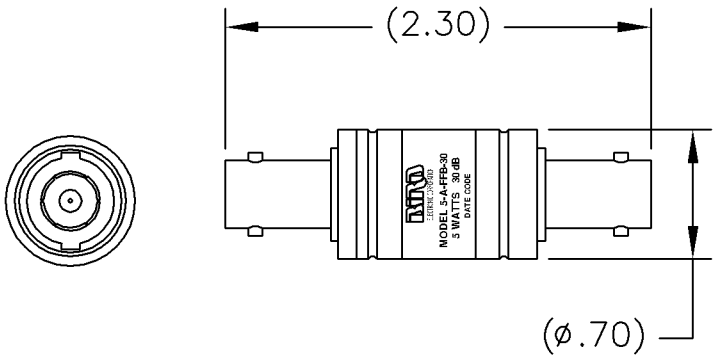

DIMENSIONS HEREON ARE FOR CUSTOMER CONVENIENCE AND REFERENCE ONLY. TOLERANCE TO BE APPLIED ONLY WHERE INDIVIDUALLY STATED ON THE RESPECTIVE DIMENSION. **-DO NOT SCALE DRAWING-**

UNLESS OTHERWISE SPECIFIED DIMENSIONS ARE IN INCHES
TOLERANCES ARE:
FRACTIONS ±1/64 DECIMALS .XX= ±.010 .XXX= ±.005
ANGLES ±30' MILLIMETERS .X= ±.4 .XX= ±.12
DO NOT SCALE DRAWING

APPROVALS		DATE
DRN	DMD	4-5-06
CHK	DMD	4-5-06
APP	DMD	4-5-06

THIS DRAWING IS THE PROPERTY OF THE BIRD TECHNOLOGIES GROUP OR BIRD ELECTRONIC CORPORATION. THE DESIGNS AND SPECIFICATIONS DISCLOSED HEREON AREPROPRIETARY AND SHALL NOT BE REPRODUCED, NOR COPIED, NOR USED AS THE BASIS FOR THE MANUFACTURE OR SALE OF APPARATUS OR DEVICES WITHOUT THEIR EXPRESS WRITTEN CONSENT.

MATERIAL CODE
FINISH CODE

BIRD TECHNOLOGIES GROUP ELECTRONIC CORPORATION

TITLE ATTENUATOR, BNC FEMALE/FEMALE 5 WATTS, 30dB

A	FSCM NO. 70998	SCALE NONE	DWG. NO. 5-A-FFB-30	REV A
PROJ./LIB AUTOCAD		COMM CODE AT1	SHEET 1 OF 1	