INSTRUCTION BOOK

OPERATING INSTRUCTIONS

TENULINE® ATTENUATOR
MODEL 8327-300

Electronic Corporation
Cleveland (Solon) Ohio USA

©Copyright 1998 by Bird Electronic Corporation
Instruction Book Part Number 920-8327-300 Revision A

Tenuline® is a Registered Trademark of
Bird Electronic Corporation

Safety Precautions

The following are general safety precautions that are not necessarily related to any specific part or procedure, and do not necessarily appear elsewhere in this publication. These precautions must be thoroughly understood and applied to all phases of operation and maintenance.

Keep Away From Live Circuits

Operating personnel must at all times observe general safety precautions. Do not replace components or make adjustments to the inside of the test equipment with the high voltage turned on. To avoid casualties, always remove power.

Shock Hazard

Do not attempt to remove the RF transmission line while RF power is present. Radiated RF power is a potential health hazard.

Do Not Service Or Adjust Alone

Under no circumstances should any person reach into an enclosure for the purpose of service or adjustment of equipment except in the presence of someone who is capable or rendering aid.

Resuscitation

Personnel working with or near high voltages should be familiar with modern methods of resuscitation.

Safety Symbols

WARNING
Warning notes call attention to a procedure, which if not correctly performed, could result in personal injury.

CAUTION
Caution notes call attention to a procedure, which if not correctly performed, could result in damage to the instrument.

This symbol appears on the equipment indicating there is important information in the instruction manual regarding that particular area.

☞ Note: Calls attention to supplemental information.

Model 8327-300 Warning Statements

The following safety warnings appear in the text where there is danger to operating and maintenance personnel and are repeated here for emphasis.

WARNING
The vent plug must be used at all times when the unit is in operation or cooling. Failure to do this could result in damage to the equipment and endanger the operator's safety. Be sure to check this plug.

WARNING
Using this load in the upper end of its power dissipation range will cause the housing to become hot! Care should be exercised in touching it.

WARNING
Never attempt to disconnect the equipment from the transmission line while RF power is being applied. Leaking RF energy is a potential health hazard.

Model 8327-300 Caution Statements

The following caution appears in the text whenever a procedure, if not properly followed, could put the equipment in danger of damage and is repeated here for emphasis.

CAUTION
This equipment is designed for operation in a horizontal position only, with mounting brackets down. Do not operate in any other manner.

Model 8327-300 Safety Statements

USAGE

ANY USE OF THIS INSTRUMENT IN A MANNER NOT SPECIFIED BY THE MANUFACTURER MAY IMPAIR THE INSTRUMENT'S SAFETY PROTECTION.

USO

EL USO DE ESTE INSTRUMENTO DE MANERA NO ESPECIFICADA POR EL FABRICANTE, PUEDE ANULAR LA PROTECCIÓN DE SEGURIDAD DEL INSTRUMENTO.

BENUTZUNG

WIRD DAS GERÄT AUF ANDERE WEISE VERWENDET ALS VOM HERSTELLER BESCHRIEBEN, KANN DIE GERÄTESICHERHEIT BEEINTRÄCHTIGT WERDEN.

UTILISATION

TOUTE UTILISATION DE CET INSTRUMENT QUI N'EST PAS EXPLICITEMENT PRÉVUE PAR LE FABRICANT PEUT ENDOMMAGER LE DISPOSITIF DE PROTECTION DE L'INSTRUMENT.

IMPIEGO

QUALORA QUESTO STRUMENTO VENISSE UTILIZZATO IN MODO DIVERSO DA COME SPECIFICATO DAL PRODUTTORE LA PROZIONE DI SICUREZZA POTREBBE VENIRNE COMPROMESSA.

SERVICE

SERVICING INSTRUCTIONS ARE FOR USE BY SERVICE - TRAINED PERSONNEL ONLY. TO AVOID DANGEROUS ELECTRIC SHOCK, DO NOT PERFORM ANY SERVICING UNLESS QUALIFIED TO DO SO.

SERVICIO

LAS INSTRUCCIONES DE SERVICIO SON PARA USO EXCLUSIVO DEL PERSONAL DE SERVICIO CAPACITADO. PARA EVITAR EL PELIGRO DE DESCARGAS ELÉCTRICAS, NO REALICE NINGÚN SERVICIO A MENOS QUE ESTÉ CAPACITADO PARA HACERIO.

WARTUNG

ANWEISUNGEN FÜR DIE WARTUNG DES GERÄTES GELTEN NUR FÜR GESCHULTES FACHPERSONAL.

ZUR VERMEIDUNG GEFÄHRLICHE, ELEKTRISCHE SCHOCKS, SIND WARTUNGSARBEITEN AUSSCHLIEßLICH VON QUALIFIZIERTEM SERVICEPERSONAL DURCHZUFÜHREN.

ENTRENTIEN

L'EMPLOI DES INSTRUCTIONS D'ENTRETIEN DOIT ÊTRE RÉSERVÉ AU PERSONNEL FORMÉ AUX OPÉRATIONS D'ENTRETIEN. POUR PRÉVENIR UN CHOC ÉLECTRIQUE DANGEREUX, NE PAS EFFECTUER D'ENTRETIEN SI L'ON N'A PAS ÉTÉ QUALIFIÉ POUR CE FAIRE.

ASSISTENZA TECNICA

LE ISTRUZIONI RELATIVE ALL'ASSISTENZA SONO PREVISTE ESCLUSIVAMENTE PER IL PERSONALE OPPORTUNAMENTE ADDESTRATO. PER EVITARE PERICOLOSE SCOSSE ELETTRICHE NON EFFETTUARRE ALCUNA RIPARAZIONE A MENO CHE QUALIFICATI A FARLA.

CONNECT INTERLOCK TO TRANSMITTER BEFORE OPERATING.

BRANCHER LE VERROUILLAGE À L'ÉMETTEUR AVANT EMPLOI.

CONECTE EL INTERBLOQUEO AL TRANSMISOR ANTES DE LA OPERACION.

VOR INBETRIEBNAHME VERRIEGELUNG AM SENDER ANSCHLIESSEN.

PRIMA DI METTERE IN FUNZIONE L'APPARECCHIO, COLLEGARE IL DISPOSITIVO DI BLOCCO AL TRASMETTITORE.

About This Manual

This instruction manual covers the Model 8327-300 Tenuline Attenuator. This instruction book is arranged so essential information on safety is contained in the front of the book. Reading the Safety Precautions section before operating the equipment is strongly advised.

The remainder of this instruction book is divided into chapters and sections.

Operation

First time operators should read Chapter 1 - Introduction, Chapter 2 - Theory of Operation, and Chapter 3 - Installation to get an overview of equipment capabilities and how to install it. An experienced operator can refer to Chapter 4 - Operating Instructions. All instructions necessary to operate the equipment are contained in this chapter.

Maintenance

All personnel should be familiar with preventive maintenance found in Chapter 5 - Maintenance. If a failure should occur, the troubleshooting section will aid in isolating and repairing the failure.

Parts

For the location of major assemblies or parts, refer to the parts lists and associated drawings in Chapter 5 - Maintenance.

Changes To This Manual

We have made every effort to ensure this manual is accurate at the time of publication. If you should discover any errors, or if you have suggestions for improving this manual, please send your comments to our factory. This manual may be periodically updated, when inquiring about updates to this manual refer to the part number and revision level on the title page.

Table Of Contents

Safety Precautions. i

Warning Statements. i

Caution Statements. ii

Safety Statements. ii

About This Manual. v

Introduction. 1

Purpose and Function. 1

Description. 1

Items Supplied. 1

Items Required. 1

Optional Items. 1

Specifications. 2

Theory Of Operation. 3

Installation. 5

Site and Shelter Requirements. 5

Unpacking and Inspection. 5

Tools Required. 5

Mounting. 5

Vent Plug. 6

Thermoswitch. 6

Operating Instructions. 9

Initial Adjustments. 9

Connection. 9

Normal Operation. 9

Operation Under Abnormal Conditions. 10

Shutdown. 10

Emergency Shutdown. 10

Maintenance. 11

Troubleshooting. 11

Cleaning. 11

Preventive Maintenance. 11

Measure dc Resistance. 11

RF Connector. 12

Coolant. 13

Adding Coolant. 13

Replacing Coolant. 13

RF Load Resistor. 14

Thermoswitch. 14

Repairs. 14

Customer Service. 14

Sales / Repair Facilities. 14

Sales Facilities. 15

Shipment. 15

RF Section Assembly. 15

Complete Unit. 15

Storage. 15

Replacement Parts List. 16

Chapter 1

Introduction

This publication refers to the Tenuline Attenuator Model 8327-300. This chapter contains introductory information including product specifications; items supplied; and accessory items available.

Purpose and Function

The Model 8727-300 Attenuator is a low-refection resistance network for application in reducing RF power by known and controlled amounts. The radiator has rhombic shaped cooling fins spaced evenly along its length for the most efficient cooling. This attenuator is useful for lowering a high input RF power to a level suitable for feeding into an oscilloscope, frequency counter or similar device. The attenuator is designed to match the most commonly used 50 ohm transmission line systems.

Description

A system of resistive film-on-ceramic cylindrical resistors immersed in a dielectric coolant constitutes the RF section assembly. By convection, the coolant carries the heat generated in the various resistor elements to the walls of the coolant housing. The housing is encased in a set of radiating fins which are attached to its outer surface. The radiating fin surfaces dissipate the heat of the coolant into the surrounding air.

The unit may be used for isolation of power sources up to 1000 W and for low level monitoring. The low power value obtained at the output of the attenuator can easily be read on an oscilloscope or terminated in a small RF load resistor.

This attenuator does not require any external source of power or utilities for cooling purposes. It is a self-contained instrument intended to be fully cooled by natural convection in normal ambient air with a power input of 1000 W. The front and rear panels of the unit have mounting flanges. These flanges act as supports for optional fixed mount. Mounting holes are provided for this purpose. Mounting of this unit is described in Chapter 3 - Installation.

Items Supplied

The following items are supplied with the Model 8327-300

- LC Female connector - input end
- N Female connector - output end
- Instruction Manual

Items Required

The following items are required to put the Model 8327-300 into service.

- Multimeter
- Screwdrivers
- Matching connectors on the coaxial transmission line

Optional Items

The following items are available as optional equipment.

- Overload thermoswitch, P/N 2450-056 for protection against burnout.
- Quick-Change connectors for convenient and easy interchange with other “AN” type “QC” connectors. Refer to the list in the Maintenance Chapter.

Specifications

Impedance	50 ohms nominal
VSWR Input, dc-500 MHz Output, dc-500 MHz	 1.10:1.0 maximum 1.15:1.0 maximum
Nominal Attenuation:	30 dB
Input Power Rating	1000 Watts
Maximum Frequency Deviation	dc-500 MHz 1/2 dB
Calibration Accuracy	±0.2 dB
Calibration Frequencies	30, 100, 200, 300, 400, 500 MHz
Power Sensitivity Correction	-1 x 10 -6 dB/Watt/MHz ±0.2 dB
Input Connector	Female “LC”, Bird “QC”
Output Connector	Female “N”, Bird “QC”
Operating Position	Horizontal
Dimensions	23-15/32"L* x 7-1/8"W x 17-3/16"H (596 x 181 x 437 mm)
Mounting Dimensions	20-23/32" x 4-1/2" rectangle (526.3 x 114.3 mm)
Ambient Temperature	-40°C to +45°C (-40°F to +113°F)
Weight	57 lb (26 kg)
Finish	Grey Powder Coat
Safety	Meets European Safety Standard EN 61010-1, Which is in accordance with Council directives 73/23/EEC and 93/68/EEC.

*Using respective LC & N connectors normally supplied.

Chapter 2

Theory Of Operation

The Model 8327-300 Attenuator is a symmetrical “T” pad, with the power distribution on the legs being different. Therefore, the value of the resistance on each leg is different according to the power it is to absorb. On the input resistor element, a propotionately larger resistor is of course required for its much greater power dissipation. A “T” configuration is used to provide equal input and output impedance’s for the 50 ohm transmission line attenuation.

The input resistor is joined by the “T” leg joint in an exponentially tapered housing to provide a linear reduction in surge impedance of 50 ohms. This arrangement produces a uniform and practically reflectionless attenuation characteristic over the stated frequencies of the attenuator.

This system of carbon-film-on-ceramic cylindrical resistors immersed in a dielectric coolant constitutes the RF section assembly. The cooling liquid and the tapered input resistor housing provide the proper electrical characteristics of the coaxial line termination.

The dielectric coolant is carefully chosen for its desirable dielectric properties, to which the diameters of the resistors and housings are matched, and for its high thermal stability characteristics. Expansion of the coolant, when power is applied to the attenuator, is accomplished by allowing the air, which is compressed by the expanding coolant, to escape through the vent plug located near the top and front face of the unit.

By convection, the coolant carries the heat generated in the various resistor elements to the walls of the coolant housing. This housing is encased in a set of radiating fins which are attached to its outer surface. These radiating fin surfaces dissipate the heat of the coolant into the surrounding air.

The Model 8327-300 may be used for isolation of power sources up to 1000 W and for low level monitoring. The low power value obtained at the output of the attenuator can easily be read on an oscilloscope or terminated in a small RF load resistor.

Figure 1
Model 8327-300 Outline Drawing

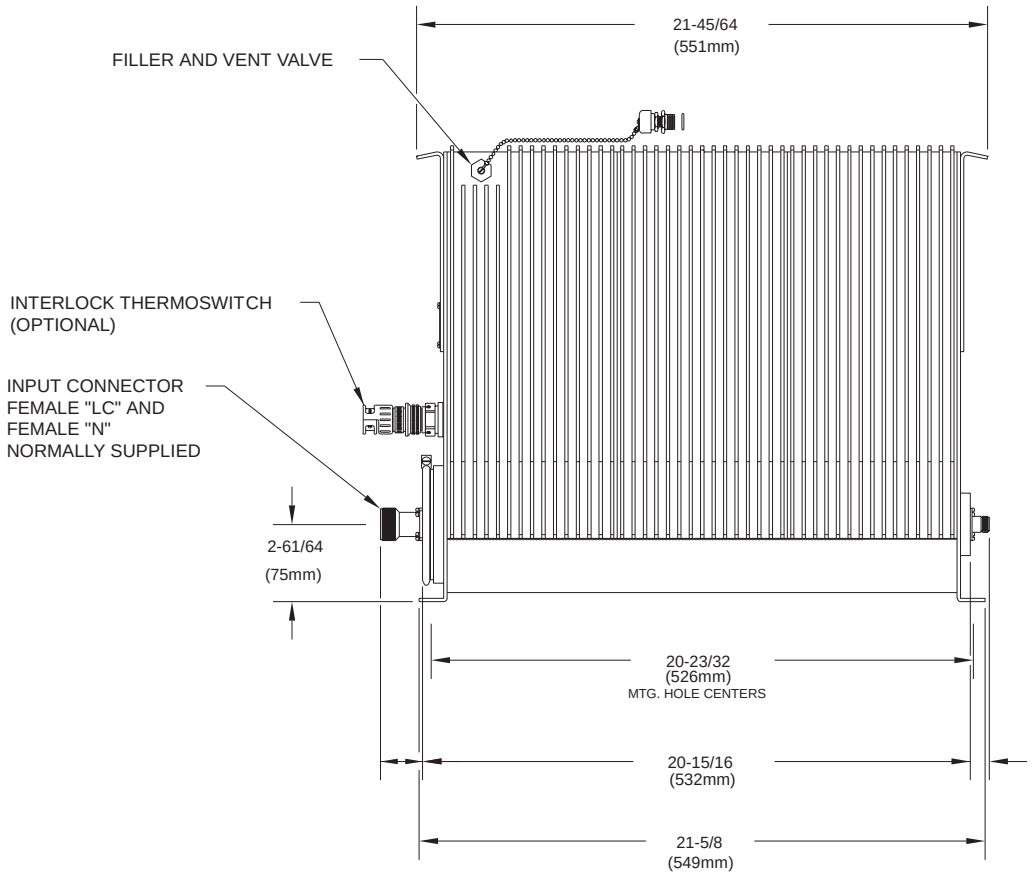

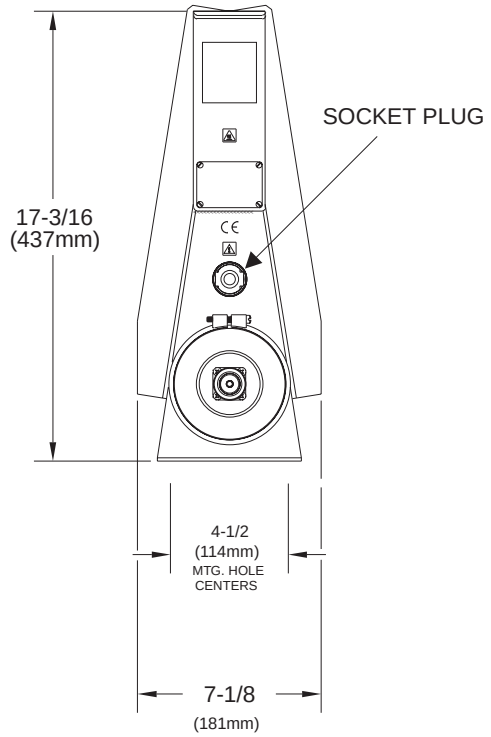

Installation

This chapter provides information for on site requirements, unpacking, inspection, and preparing the equipment for use.

Site and Shelter Requirements

The Model 8327-300 Attenuator should be operated in a dry, dust and vibration free environment. The ambient temperature range should remain between -40°C and +45°C (-40°F and +113°F) for proper operation. Allow at least 12" (305 mm) of clearance around the unit to permit an unimpeded access of convection air currents for adequate heat dissipation. To permit the shortest possible cable length, place the attenuator as close as possible to the transmitting equipment.

Unpacking and Inspection

Follow the steps below when unpacking the equipment.

1. Inspect the shipping container for signs of damage. If damage is noticed, do not unpack the equipment. Immediately notify the shipping carrier and Bird Electronic Corporation of the damage.
2. If the shipping container is not damaged, unpack the unit. Save all shipping materials for repackaging.
3. Inspect all components for visual signs of damage. Immediately notify the shipping carrier and Bird Electronic Corporation of equipment damage or missing parts.

Tools Required

The following tools and supplies will be required to prepare the unit for use.

- Wrenches
- Screwdrivers
- 9/16 Hex wrench (for thermoswitch installation)
- Pipe sealing compound (for thermoswitch installation)
- Soldering Iron and solder (for thermoswitch installation)
- Bolt and nut sets or lag screws (for mounting)

Mounting

> CAUTION
> This equipment is designed for operation in a horizontal position only, with mounting brackets down. Do not operate in any other manner.

The attenuator may stand free or may be secured to a bench or any convenient flat surface. The front and rear face plates are made of heavier gauge material bent outward 90° at the bottom to form mounting flanges. At each corner if these flanges is a 3/8 inch x 15/32 inch elongated hole for use with suitable fasteners up to 3/8 inch. The holes are arranged in a 20-23/32 inch x 4-1/2 inch rectangle (526.3 x 114.3 mm). The front and rear face plates of the attenuator are also bent over on the top to form convenient carrying handles. The following instructions are for mounting the unit to a suitable surface.

1. Place the unit on a flat surface.
2. Insert the fasteners, up to 3/8 inch, through the bench and the holes.
3. Secure the bolts with nuts and lock washers.

Vent Plug

> WARNING
> The vent plug must be used at all times when the unit is in operation or cooling. Failure to do this could result in damage to the equipment and endanger the operator's safety. Be sure to check this plug.

Before placing the attenuator into service, the solid shipping plug, P/N 2450-049, must be removed and replaced by the spring loaded vent plug, P/N 2450-094. The vent hole for these plugs is located at the top left hand side near the front. The two plugs are linked together by a short length of bead chain. The shipping plug should be placed back in the vent hole whenever the attenuator is to be shipped. Be careful not to lose the O-Ring seal. Refer to figures 2 and 3.

Figure 2
Shipping Plug

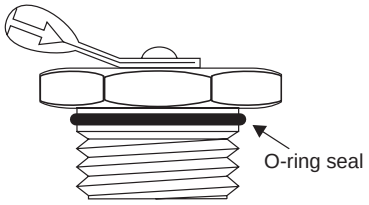

Figure 3
Vent Plug

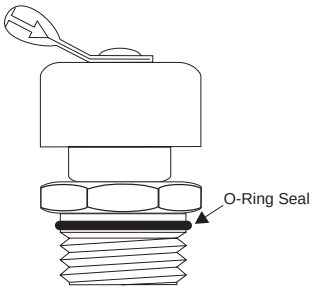

Thermoswitch

As an optional item, the attenuator can be provided with a thermoswitch assembly, P/N 2450-056. When the thermoswitch is installed, it prevents possible damage from accidental power overloading from the transmitter or equipment malfunction. The thermoswitch is normally closed and opens at a maximum safe temperature. Since the thermoswitch is connected in series with the transmitter interlock, it cuts off transmitter power if the coolant temperature exceeds this value. The assembly consists of:

- Thermoswitch body - P/N 2450-040
- Coupling Jack - P/N 2450-018

If the thermoswitch is to be field installed, proceed as follows:

1. Replace the vent plug with the shipping plug.
2. Stand the unit on its back end with the input connector end up.

☞ Note: In this position there is no danger of the coolant pouring out through the socket plug hole.

3. Remove the socket plug located just above the connector on the front face of the radiator. Use a 9/16 hex wrench. Refer to figure 1.
4. Replace the plug with the thermoswitch. Use an acceptable pipe sealing compound sparingly on *only* the external threads of the thermoswitch.

☞ Note: Do not contaminate the coolant with pipe sealing compound.

5. Check the unit for coolant leaks.

While following the instructions below for connecting the thermoswitch, refer to figure 4.

1. Unscrew the larger knurled ring-nut (A) at the lower end of the coupling jack assembly. Pull it off from the thermoswitch jack (B). Unscrew the small knurled cover fitting (C) from the base plug (D) of the connector to release the base.

2. Thread the interlock wires through the clamp (E) with the washers (F) inside and with its threaded fitting in place.

3. Service the interlock wire with short tips, use spaghetti sleeves over the wire ends if needed.

4. Securely solder the interlock leads to the lugs (G) of the connector base.

☞ Note: Be sure that the larger captive clamping nut (A) is in place over the base plug (D) with the knurled end outward towards face.

5. Screw on the cover ring (C) first, then fasten the cable clamp (E) in place, and tighten the two yoke screws (H) on the cable. Push the plug back onto the thermoswitch, and tighten the captive knurled connecting ring. *Do not* attempt to *operate* the equipment *without* the interlock attached.

Figure 4 Thermoswitch Assembly

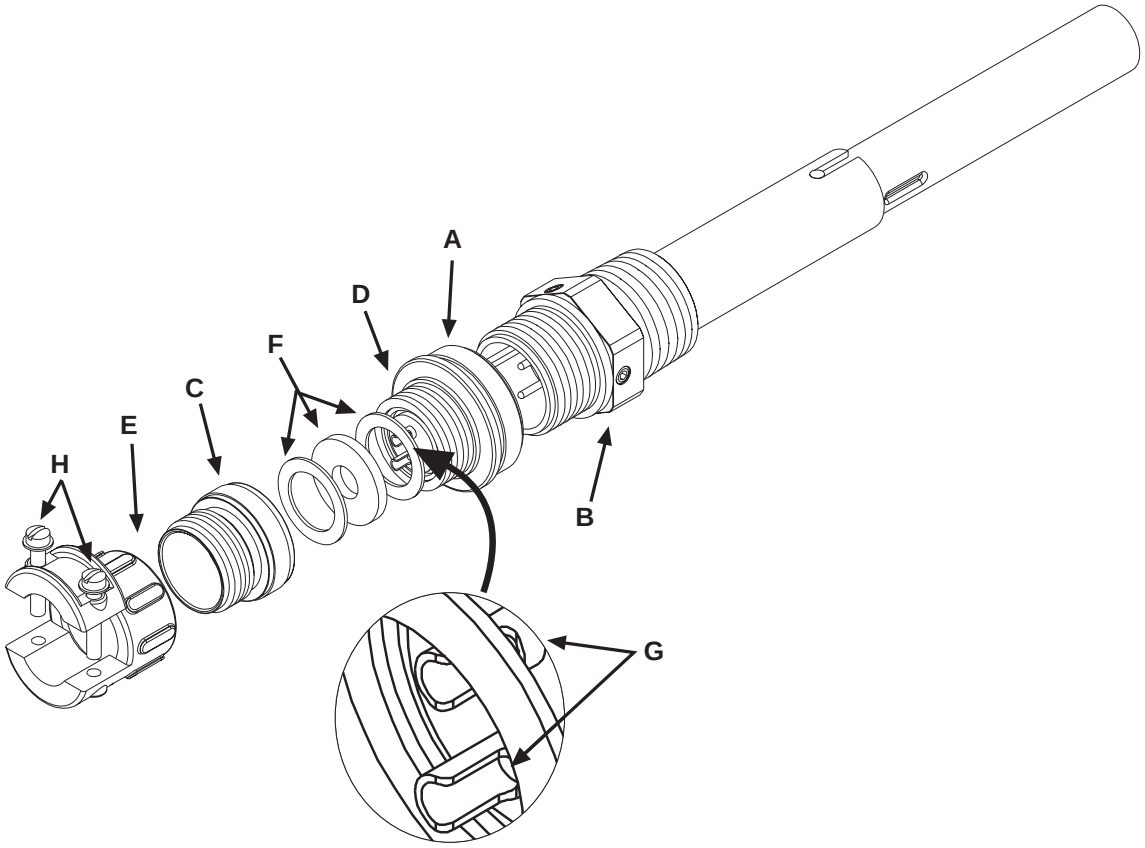

Operating Instructions

There are no operating controls for the Model 8327-300 Attenuator. Read and become familiar with the following instructions before operating the unit. If your attenuator is equipped with a thermoswitch, refer to the instructions for connection to the interlock.

Initial Adjustments

Before connection of the attenuator, perform the following steps.

1. Wipe all connectors and insulator surfaces on the transmission line face with a clean soft cloth.
2. Check the RF input connector. Clean the connector if necessary. Use a self-drying, non-residue forming contact cleaner on the inaccessible portions of the connector.
3. Check the input resistance of the attenuator. Refer to the Maintenance chapter.

> WARNING
> Never attempt to disconnect the equipment from the transmission line while RF power is being applied. Leaking RF energy is a potential health hazard.

Connection

The front or input end of the attenuator is identified by the four inch (102 mm) diameter die-cast aluminum disc on which the connector is mounted. The rear face of the unit has OUTPUT stenciled above the connector. *Do not* couple the attenuator backwards to the direction of power flow. Destruction of the output resistor will result.

1. Connect the attenuator input to the transmitter's power output. Use 50 ohm coaxial cable.
2. Connect the attenuator output to a suitable load with 50 ohm coaxial cable (RG-8A/U, RG-9/U, RG-213/U or equivalent) equipped with connectors which mate with the RF output connector of the attenuator.
3. Follow the transmitter manufacturer's instructions.

☞ Note: If the attenuator is to be operated at both maximum power and frequency values, use a Male LC connector with a suitable cable (RG-218/U or RG-220/U) on the input and Male N connector with appropriate cable or load on the output. These connect to the RF fittings normally supplied.

Before applying any RF power to the attenuator, be certain to check that the vent plug is in place in the vent hole. Refer to Installation.

Normal Operation

> WARNING
> Using this load in the upper end of its power dissipation range will cause the housing to become hot! Care should be exercised in touching it.

> WARNING
> The vent plug must be used at all times when the unit is in operation or cooling. Failure to do this could result in damage to the equipment and endanger the operator's safety. Be sure to check this plug.

> CAUTION
> This equipment is designed for operation in a horizontal position only, with mounting brackets down. Do not operate in any other manner.

Because the Model 8327-300 Attenuator is a passive device and has no indicators or controls, it requires no operating procedures or surveillance when the performance limits are not exceeded. It should function faultlessly, absorbing and converting the excess RF energy into heat indefinitely, if it is properly maintained and not subjected to an overload.

Operation Under Abnormal Conditions

The Model 8327-300 Attenuator is not intended or recommended for outdoor use. The Attenuator may be subjected to moderate overloads for limited periods of time without overheating. However, this should be done cautiously, and it is strongly recommended that if such a use is contemplated, the attenuator should be equipped with a thermoswitch, P/N 2450-056. When interlocked with the power line to the source of RF energy, the thermoswitch becomes a fail safe device to guard the attenuator against the dangers of overheating.

> WARNING
> Never attempt to disconnect the equipment from the transmission line while RF power is being applied. Leaking RF energy is a potential health hazard.

Shutdown

This attenuator, being a passive device, cannot be shut off. The source of RF energy must be cut off instead.

Emergency Shutdown

Turn off RF power at its source.

Maintenance

This chapter contains operator maintenance instructions, troubleshooting, and parts information.

Troubleshooting

Problem	Possible Cause	Remedy
Leaking of coolant oil around clamping band or radiator housing.	Clamping band not tight.	Tighten slightly with a screwdriver.
	Faulty O-Ring (Input)	Replace, refer to the Coolant paragraph
	Faulty O-Ring (Output)	Replace, refer to the Coolant paragraph
Excessive overheating of the radiator.	Transmitter power too high	Reduce transmitter power
	Faulty RF section assembly	Replace, refer to Coolant paragraph
	Coolant oil level too low	Add more coolant oil to the radiator.
High or low dc resistance values per the Measure dc Resistance paragraph.	Faulty RF input connector	Replace the input connector per the RF Connector paragraph.
	Loose RF input connector	Tighten the input connector with a screwdriver.
	Faulty RF section assembly.	Replace per the Coolant paragraph.

Cleaning

The most important cleaning task is to remove accumulations of dust and lint from the radiator fins. An extensive collection of dust and lint on the cooling fins will interfere with the efficient dissipation of heat.

When dirt and dust have accumulated in the radiator fin spaces it should be cleaned.

Preparation:

- Material: Lint-free cleaning cloth
- Mild detergent

To clean the unit follow the instructions below.

1. Gently remove loose dirt and grime using a soft clean cloth dampened with a mild warm solution of detergent and water.

2. Check the condition of the RF coaxial connector. If it needs cleaning, clean the connector with a self-drying contact cleaner, that leaves no residue on the inaccessible portions.

Preventive Maintenance

Measure dc Resistance

Preparation:

- Tools: Common hand tools

- Ohmmeter with an accuracy of ±1% at 50 Ohms.
- Temperature of the load between 20°C to 25°C (68°F to 77°F)

Accurate measurement of the dc resistance between the inner and outer conductors of the RF input connector will provide a good check of the condition of the load resistor. Checking the dc resistance is simply used to measure a change in the condition of the resistor over time. The tracking of the dc resistance must start *before* the resistor is first put into service. Perform the following steps and record the value for future comparison. Check and record the resistance of the load periodically according to use.

> WARNING
> Never attempt to disconnect the equipment from the transmission line while RF power is being applied. Leaking RF energy is a potential health hazard.

1. Turn off RF power and interlock circuitry before any electrical disconnection's are made.
2. Disconnect the RF coaxial line.
3. Connect the multimeter test leads across the center and outer conductor of the load resistor. Refer to figure 5.

Figure 5 Meter Lead Placement

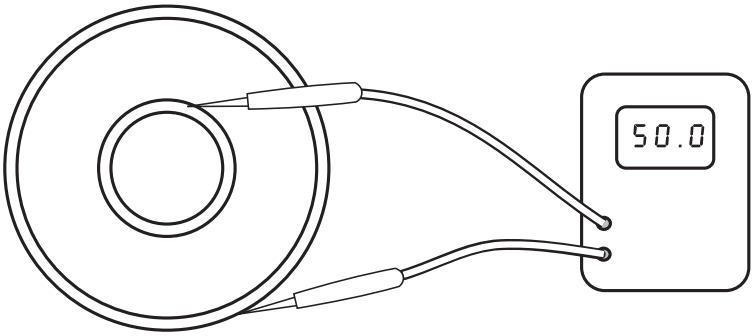

4. Record the value of the resistance *before* the load is put into service. Compare subsequent values with the latest reading. If the values vary more than 2 ohms, this could be an indication of a failing resistive element.

☞ Note: It is recommended that this resistance check be performed each time the load is to be used.

RF Connector

Tool required:

- Screwdriver

The following paragraphs outline the component removal and replacement procedure.

The connector is a "Quick-Change" design which permits easy interchange with the use of only a screwdriver. This process does not interfere with the essential coaxial continuity of the attenuator RF input, out put, or the coolant oil seals. For replacement, proceed as follows:

1. Remove and retain the four screws from the corners of the RF connector.

2. Pull the connector straight out of its socket.
3. Insert the new connector into the mating connector. Be sure the projecting center pin on the connector is properly engaged and seated in the mating socket, then push it in firmly.
4. Install the four screws that were previously removed.

Coolant

The level of the dielectric coolant should remain constant in the unit after prolonged usage under normal operating conditions. As shipped, the coolant is at a factory determined level, and should be about 3-1/4 inches (82.5 mm) below the surface of the thermoswitch hole, with the unit in a vertical position. However, loss of up to 10% of the full tank capacity should not impair the operating efficiency of the attenuator. The coolant should be a light yellow color. If it is dark and not a light yellow, it may be contaminated and should be replaced. Occasionally inspect around the clamping band at the input end for possible coolant leakage. Tighten the clamping screw if necessary, and make certain the O-Ring seal is in good condition; i.e., soft and pliable and free from surface cracks.

Adding Coolant

Add coolant through the pipe plug hole (thermoswitch hole) until it reaches the proper level, about 3-1/4 inches below the surface of the hole. Do not overfill the unit beyond the recommended level.

Replacing Coolant

To replace all of the coolant use the following procedure:

1. Remove the rear (output) connector per the Disassembly paragraph.
2. Replace the vent plug with the shipping plug.
3. Carefully raise the unit by its front handle and foot until it is tipped up on its back.
4. Position the load on the bench top so that the entire rear connector assembly, minus the connector, projects over the edge of the bench. Brace it vertically in this position so that it will not topple over.
5. Place a clean container for liquid just under the rear connector assembly to receive the oil. The volume of the oil is 2.9 gallons (11 liters), so the container must be at least a three gallon size, and preferably five gallons.
6. Remove the V-band clamp from around the front (input) connector assembly by loosening the 10-32 holding screw sufficiently to slip the band off.
7. Carefully work the RF section assembly loose and lift it straight out of the resistor tank.

☞ Note: There will be some initial resistance as the O-Ring seal around the rear connector assembly comes loose from the housing.

As the RF section comes out of the rear connector assembly, the coolant will start to pour into the container. Work the RF section loose slowly, so that the coolant doesn't splash coming out.

8. Let the coolant drip for a few minutes to get as much as possible out of the radiator tank. As the RF section is raised out of the radiator tank some coolant will be trapped in the rear end cylinder. Turn the section over carefully to empty it out.

☞ Note: An alternate, but much slower, method of draining the radiator would be to siphon the coolant out of the thermoswitch hole.

9. Discard the contaminated coolant collected in the container.
10. Replace the RF section assembly making sure that it is smoothly and firmly seated in the rear connector assembly.
11. Replace the V-band on the front connector plate assembly and tighten the the screw.
12. Add clean coolant to the unit. Fill the unit until the level is about 3-1/4 inches below the thermoswitch hole.
13. Coat the pipe plug or thermoswitch threads sparingly with pipe sealant. Do not contaminate the coolant.
14. Screw the pipe plug or thermoswitch back in place carefully to avoid stripping the aluminum threads of the plug hole.
15. Lower the attenuator back onto its feet.
16. Check all seals for signs of leaks.

RF Load Resistor

To replace the load resistor follow the same procedure as in the Replacing Coolant section. However, inspect the O-Ring seals. Do not reuse the O-Rings if they are no longer soft and pliable or shows signs of cracks. If the coolant removed is not contaminated, it may be reused in the radiator tank with additional new coolant as required. The RF section is not field repairable and further disassembly should not be attempted. Return the entire RF assembly to the factory for repair or replacement.

Thermoswitch

To remove or replace the thermoswitch use the procedures in the Thermoswitch paragraph in Chapter 3 - Installation.

Repairs

Any maintenance or service procedure beyond the scope of those provided in this section should be referred to a qualified service center.

Customer Service

Sales / Repair Facilities

U.S.A. Sales and Manufacturing

Service Group
Bird Electronic Corporation
30303 Aurora Road
Cleveland (Solon), Ohio 44139-2794
Phone: (440) 248-1200
Fax: (440) 248-5426

Sales Facilities

For the location of the sales office nearest you, give us a call or visit our Web site at:

http://www.bird-electronic.com

Shipment

RF Section Assembly

Wrap the RF section assembly with sufficient padding to avoid damage in shipping and tape securely. Place the wrapped RF section in a cardboard carton and pad or brace it to prevent shifting.

Complete Unit

Should you need to return the Attenuator, first remove the vent plug and replace it with the shipping plug. The unit may be shipped with its dielectric coolant; however, do not ship the unit with its dielectric coolant if the unit has developed a leak. Drain the coolant first. Place the attenuator in a wooden crate or other substantial shipping container, and pack or brace it securely to prevent damage in shipping.

All instruments returned for service must be shipped prepaid and to the attention of the Customer Service Group.

Storage

No special preparations for storage are necessary other than to cover the equipment to keep out dust and dirt. Store the unit in a dry and dust-free environment where the ambient temperature will remain within the -40°C to -45°C (-40°F to +113°F) operational range of the load.

Replacement Parts List

Item	Qty.	Description	Part Number
1	1	RF section assembly	8327-302
2	1	Radiator assembly	8329-307
3	2.9 gal. (11 liters)	Dielectric coolant	5-030-3 (1 gallon container)
4	3	“QC” connector	*See Below
5	1	Clamp band assembly (includes screws)	2430-055
6	1	Input O-Ring seal	8110-039
7	1	Output O-Ring seal	5-176
8	1	Vent relief valve	2450-094
9	1	Shipping plug	2450-049
10	2	Vent and shipping plug O-Ring	5-504
11	1	Chain assembly	8180-094
12	1	Thermoswitch plug	5020-103
13	1	Thermoswitch & connector assembly accessory kit consisting of: Connector assembly Thermoswitch assembly	2450-056 2450-018 2450-040

***Available “QC” Type Connectors**

† N-Female(input/output)	4240-062	LT-Female	4240-018
N-Male	4240-063	LT-Male	4240-012
HN-Female	4240-268	C-Female	4240-100
HN-Male	4240-278	C-Male	4240-110
†LC-Female(input)	4240-031	UHF-Female (SO-239)	4240-050
LC-Male	4240-025	UHF-Male (PL-259)	4240-179
7/8" EIA Air Line 4240-002			

†Normally supplied

Limited Warranty

All products manufactured by Seller are warranted to be free from defects in material and workmanship for a period of one (1) year, unless otherwise specified, from date of shipment and to conform to applicable specifications, drawings, blueprints and/or samples. Seller's sole obligation under these warranties shall be to issue credit, repair or replace any item or part thereof which is proved to be other than as warranted; no allowance shall be made for any labor charges of Buyer for replacement of parts, adjustment or repairs, or any other work, unless such charges are authorized in advance by Seller.

If Seller's products are claimed to be defective in material or workmanship or not to conform to specifications, drawings, blueprints and/or samples, Seller shall, upon prompt notice thereof, either examine the products where they are located or issue shipping instructions for return to Seller (transportation-charges prepaid by Buyer). In the event any of our products are proved to be other than as warranted, transportation costs (cheapest way) to and from Seller's plant, will be borne by Seller and reimbursement or credit will be made for amounts so expended by Buyer. Every such claim for breach of these warranties shall be deemed to be waived by Buyer unless made in writing within ten (10) days from the date of discovery of the defect.

The above warranties shall not extend to any products or parts thereof which have been subjected to any misuse or neglect, damaged by accident, rendered defective by reason of improper installation or by the performance of repairs or alterations outside of our plant, and shall not apply to any goods or parts thereof furnished by Buyer or acquired from others at Buyer's request and/or to Buyer's specifications. In addition, Seller's warranties do not extend to the failure of tubes, transistors, fuses and batteries, or to other equipment and parts manufactured by others except to the extent of the original manufacturer's warranty to Seller.

The obligations under the foregoing warranties are limited to the precise terms thereof. These warranties provide exclusive remedies, expressly in lieu of all other remedies including claims for special or consequential damages. SELLER NEITHER MAKES NOR ASSUMES ANY OTHER WARRANTY WHATSOEVER, WHETHER EXPRESS, STATUTORY, OR IMPLIED, INCLUDING WARRANTIES OF MERCHANTABILITY AND FITNESS, AND NO PERSON IS AUTHORIZED TO ASSUME FOR SELLER ANY OBLIGATION OR LIABILITY NOT STRICTLY IN ACCORDANCE WITH THE FOREGOING.